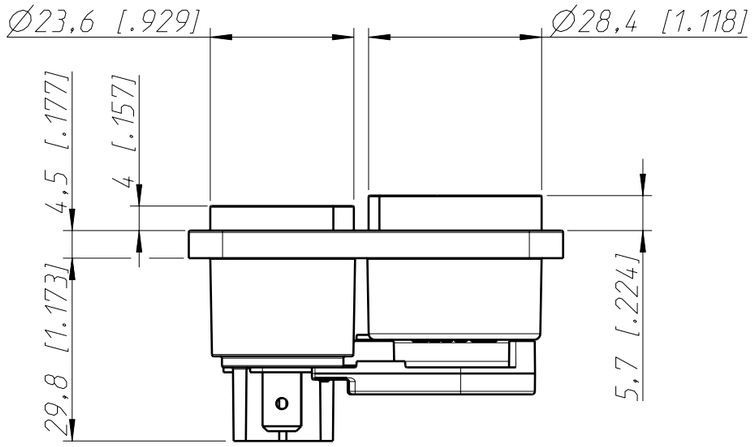

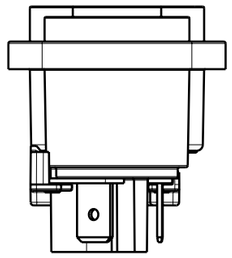

Frontplattenausschnitt
panel cutout

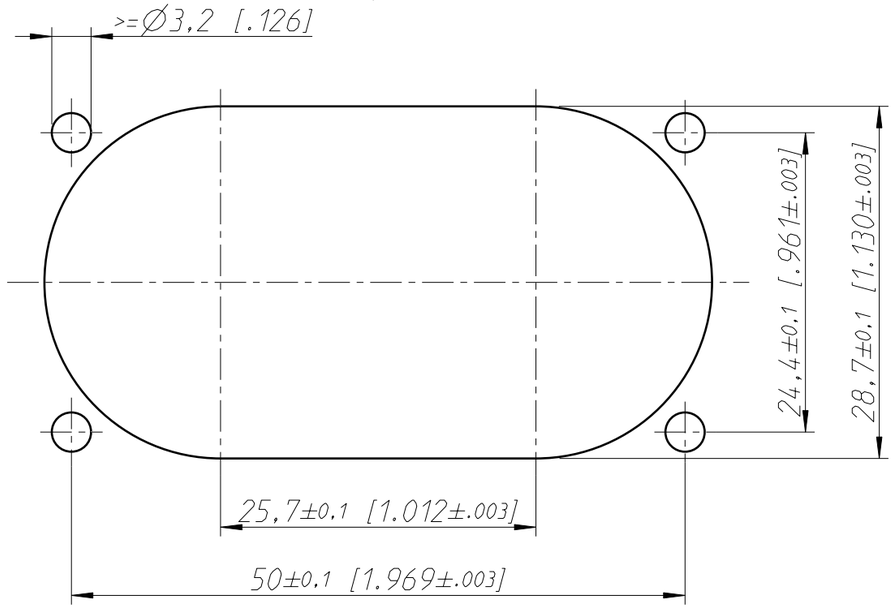

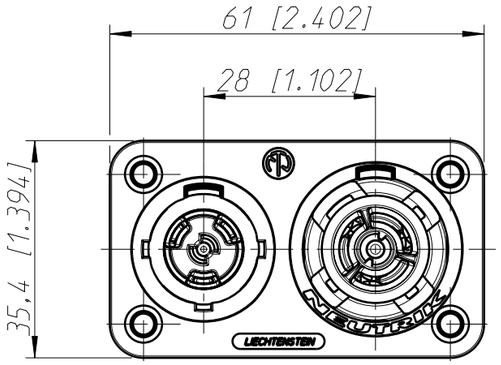

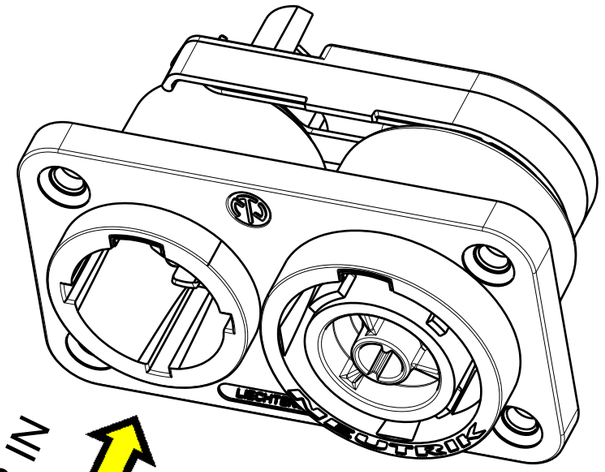

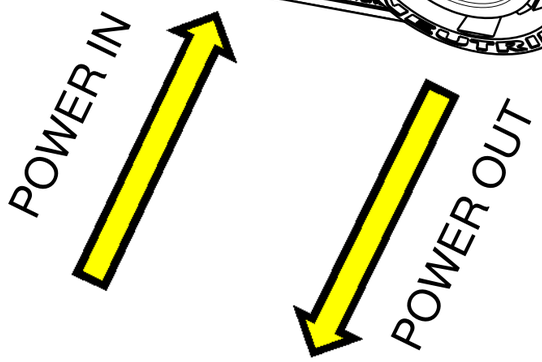

General tolerances ISO 2768-m	Scale		Date	Name
Refer to protection notice ISO 16016.	1:1 (A3)	Drawn	03.05.18	Ender
Name powerCON TRUE1 TOP NAC3PX-TOP		Modified	-	-
		Change-No. -	Sheet-No. 1 / 1	Index –
		Replacement for:		
NEUTRIK		Drawing-No. ST-NAC3PX-TOP		